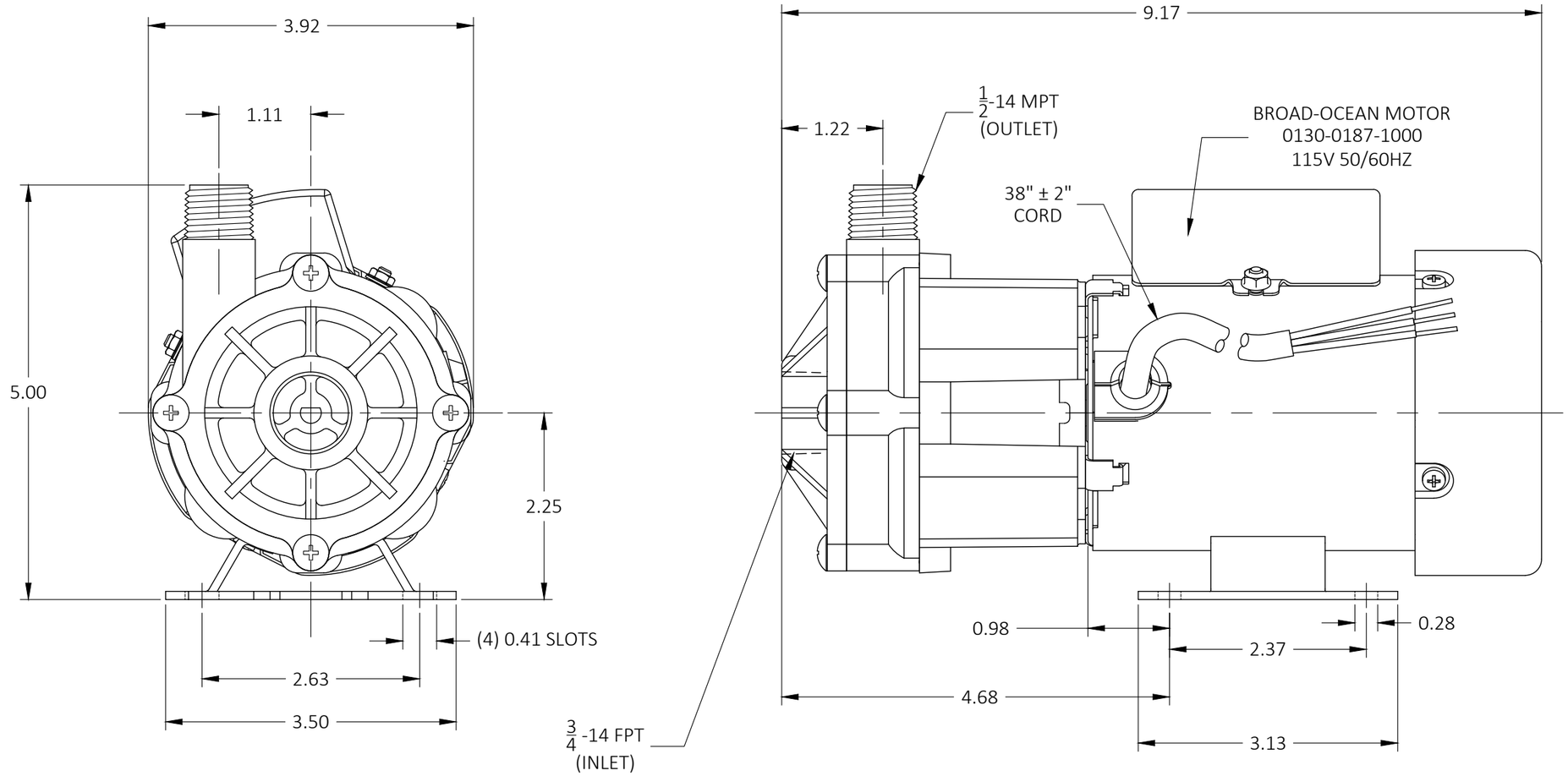

DRAWING SIZE: C-17x22	MARCH MFG. INC.	1819 PICKWICK AVE. GLENVIEW, ILLINOIS	DRAWN CA	07/08/25	MOLD # ----
UNLESS NOTED OTHERWISE ALL DIMS ARE IN INCHES.			CHECKED HZ	07/08/25	FIXTURE # ----
DIMS. TOLERANCE			CUSTOMER ----		
X.XX ±0.03			MATERIAL ----		
X.XXX ±0.005					
ANGLES ±1°					

THIS DOCUMENT DISCLOSED SUBJECT MATTER IN WHICH MARCH MFG. INC. HAS PROPRIETARY RIGHTS, NEITHER RECEIPT NOR POSSESSION THEREOF CONFERS OR TRANSFERS ANY RIGHT TO REPRODUCE OR DISCLOSE THE DOCUMENT, ANY PART THEREOF, ANY INFORMATION CONTAINED THEREIN, OR ANY PHYSICAL ARTICLE OR DEVICE OR TO PRACTICE ANY METHOD OR PROCESS, EXCEPT BY WRITTEN PERMISSION FROM OR WRITTEN AGREEMENT WITH MARCH MFG. INC.

REV.	INITIALS	DATE	CHANGE

PART NAME Dimensional Assy BC-3CP-MD 115V 50/60HZ (Broad-Ocean)

PART # 0130-0192-0100 d1

REV. ----